# 7

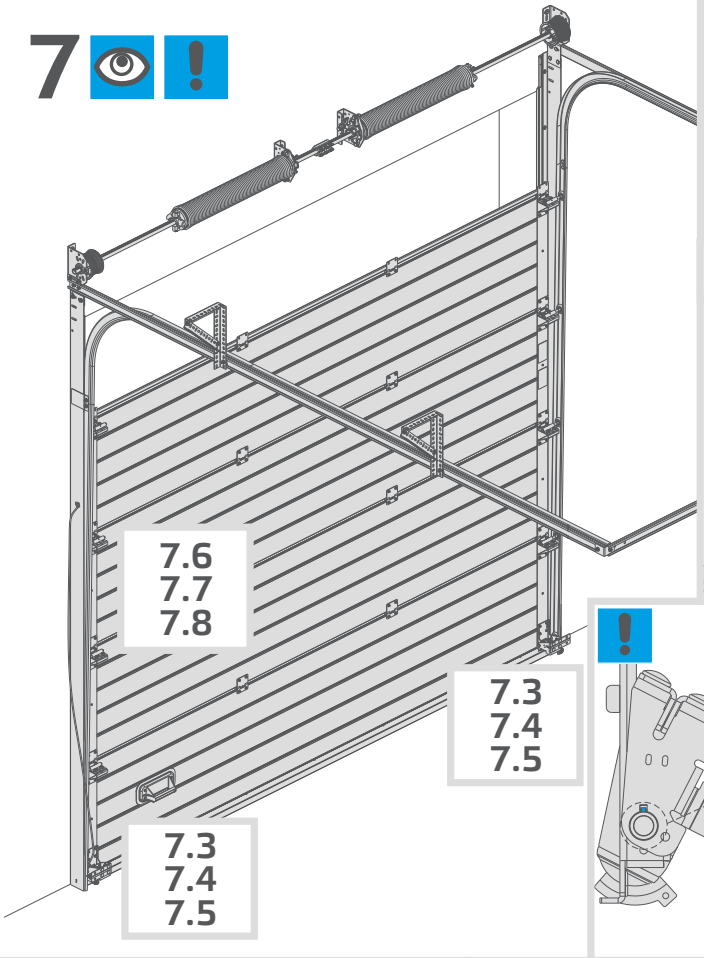
7.6
7.7
7.8
7.3
7.4
7.5
7.3
7.4
7.5

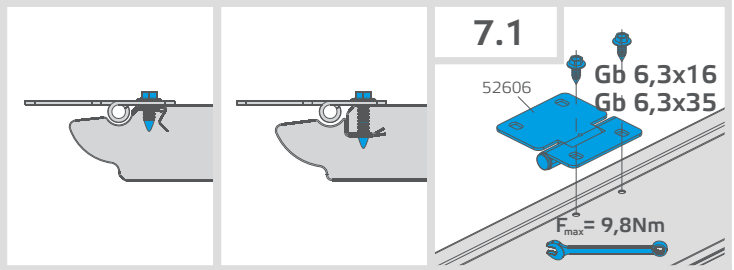
7.1
52606
Gb 6,3x16
Gb 6,3x35
$F_{max}$= 9,8Nm

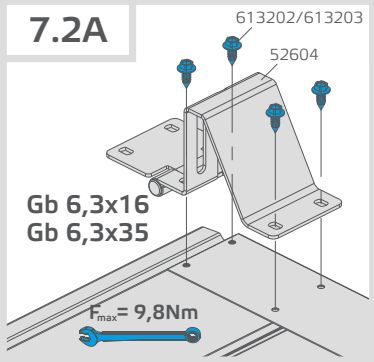
7.2A
613202/613203
52604
Gb 6,3x16
Gb 6,3x35
$F_{max}$= 9,8Nm

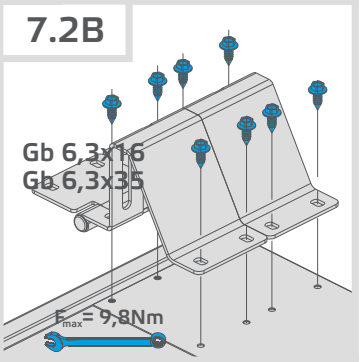
7.2B
Gb 6,3x16
Gb 6,3x35
$F_{max}$= 9,8Nm

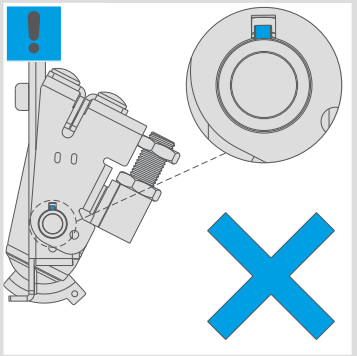

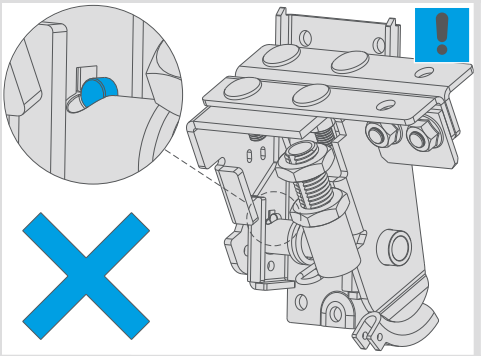

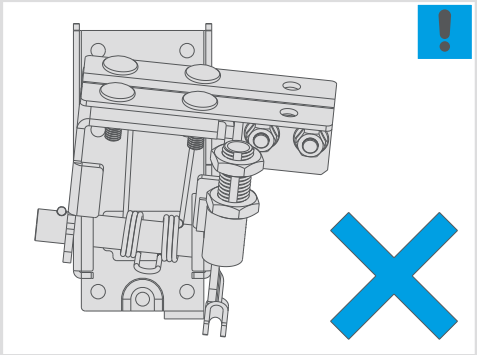

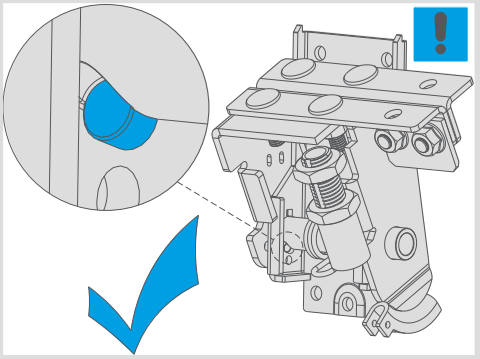

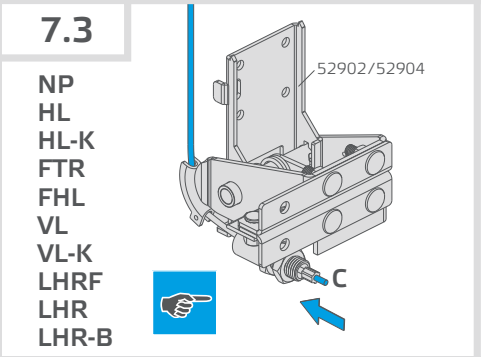
7.3
NP
HL
HL-K
FTR
FHL
VL
VL-K
LHRF
LHR
LHR-B
52902/52904
C

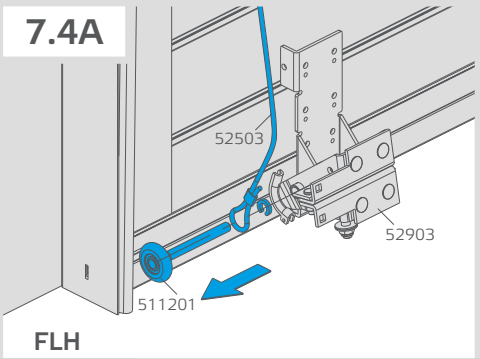
7.4A
52503
52903
511201
FLH

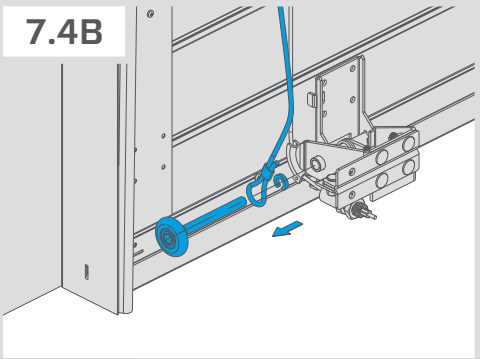
7.4B

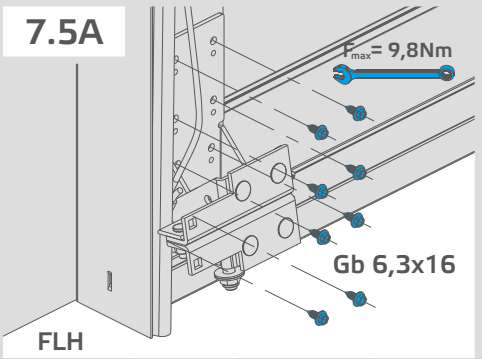
7.5A
$F_{max}$= 9,8Nm
Gb 6,3x16
FLH

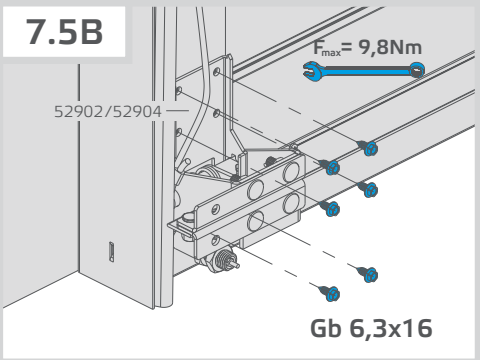
7.5B
$F_{max}$= 9,8Nm
52902/52904
Gb 6,3x16

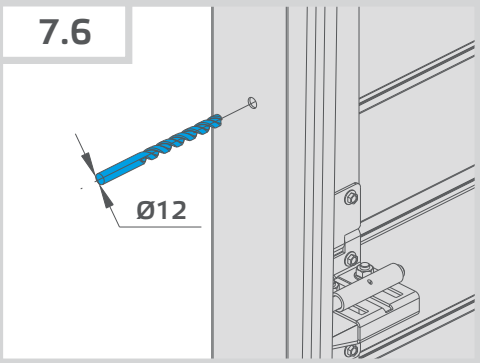
7.6
Ø12

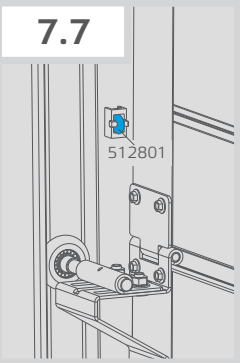
7.7
512801

7.8
52503

# 7*

$F_{max}$= 9,8Nm

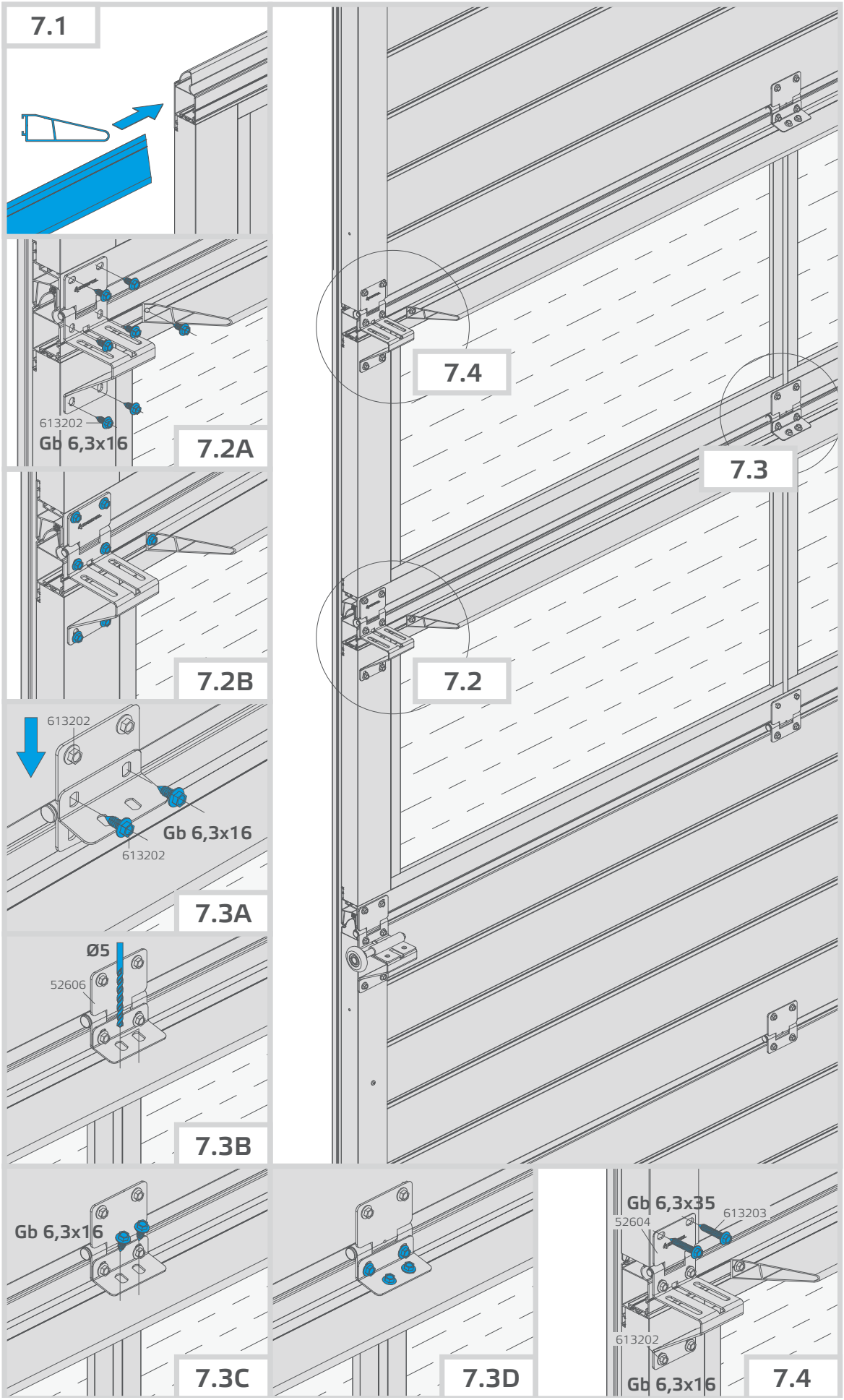
7.1
613202
Gb 6,3x16
7.2A
7.2B
613202
Gb 6,3x16
613202
7.3A
Ø5
52606
7.3B
7.4
7.3
7.2
Gb 6,3x16
7.3C
7.3D
Gb 6,3x35
52604
613203
613202
Gb 6,3x16
7.4

# 8

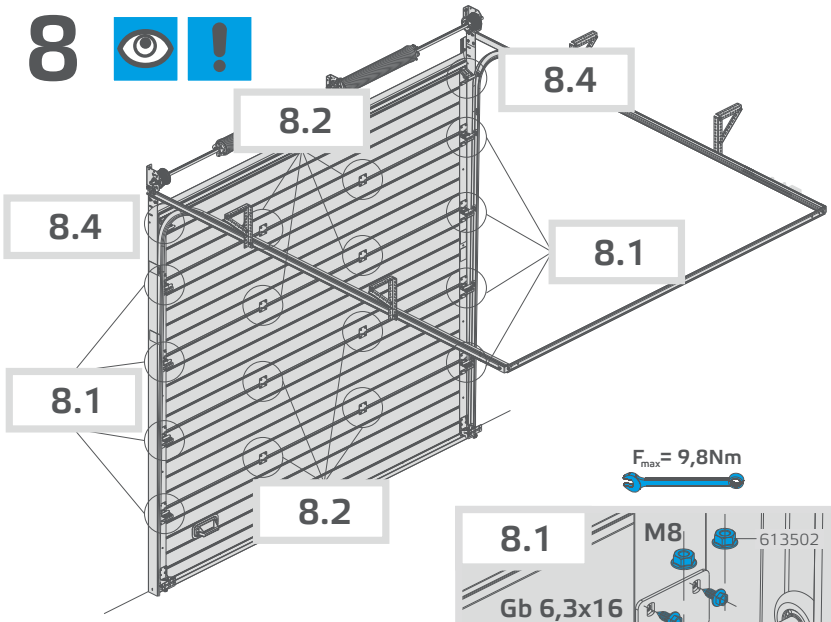
8.4
8.2
8.4
8.1
8.1
8.2

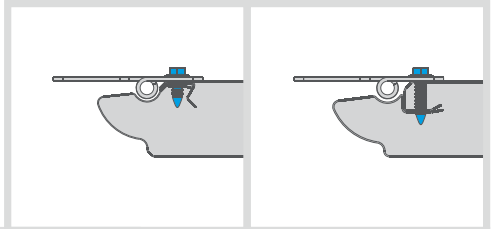

$F_{max}$= 9,8Nm

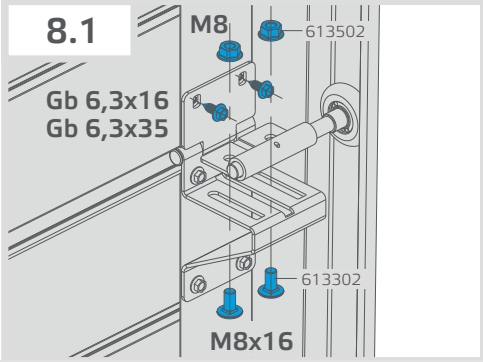
8.1
M8
613502
Gb 6,3x16
Gb 6,3x35
613302
M8x16

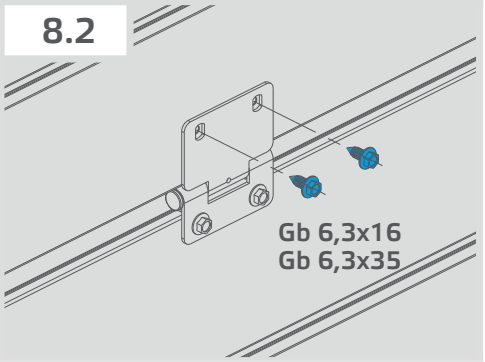
8.2
Gb 6,3x16
Gb 6,3x35

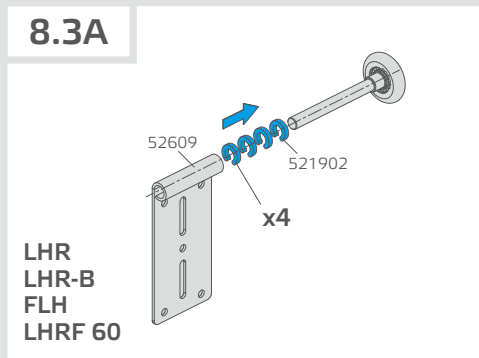
8.3A
52609
521902
x4
LHR
LHR-B
FLH
LHRF 60

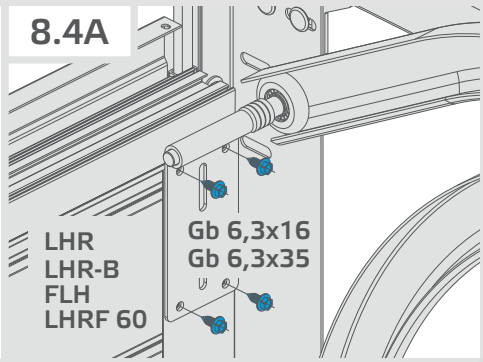
8.4A
LHR
LHR-B
FLH
LHRF 60
Gb 6,3x16
Gb 6,3x35

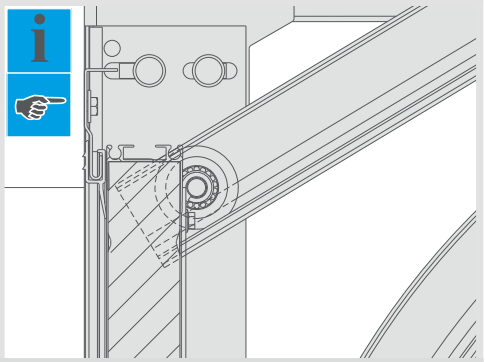

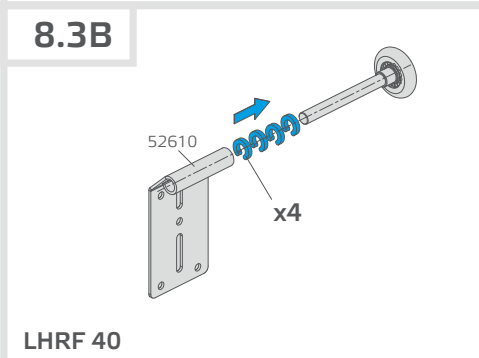
8.3B
52610
x4
LHRF 40

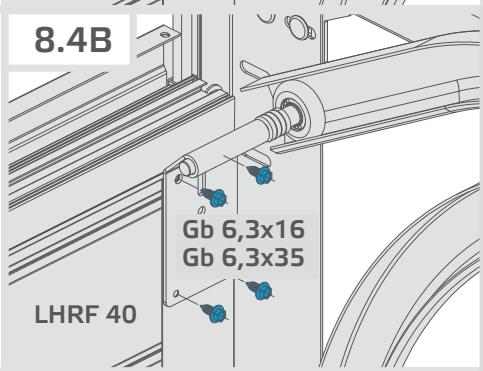
8.4B
Gb 6,3x16
Gb 6,3x35
LHRF 40

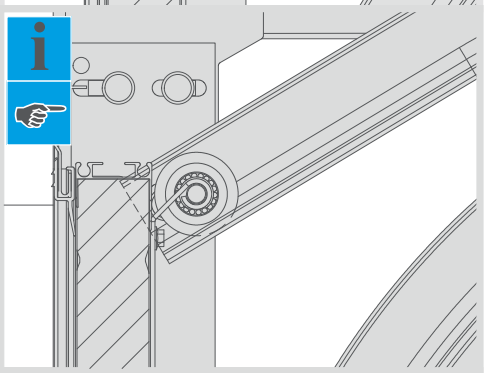

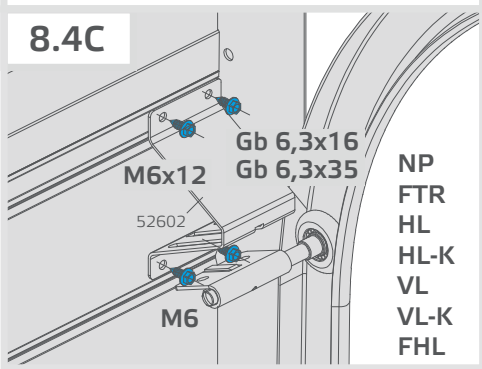
8.4C
Gb 6,3x16
Gb 6,3x35
M6x12
52602
M6
NP
FTR
HL
HL-K
VL
VL-K
FHL

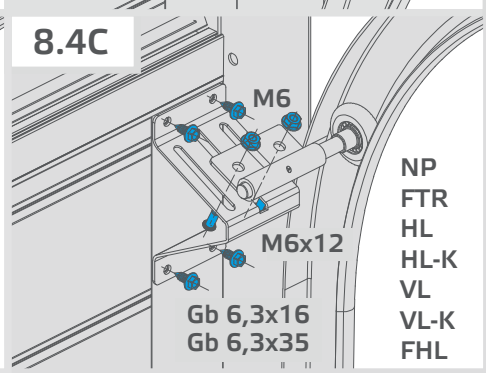
8.4C
M6
M6x12
Gb 6,3x16
Gb 6,3x35
NP
FTR
HL
HL-K
VL
VL-K
FHL

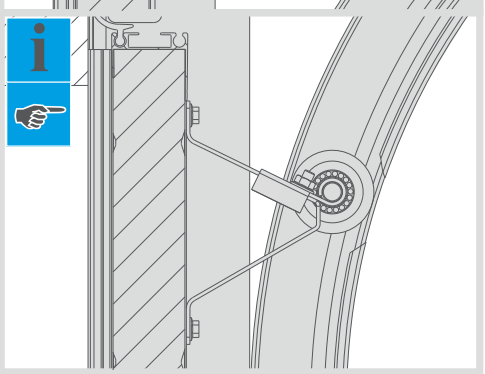

# 9

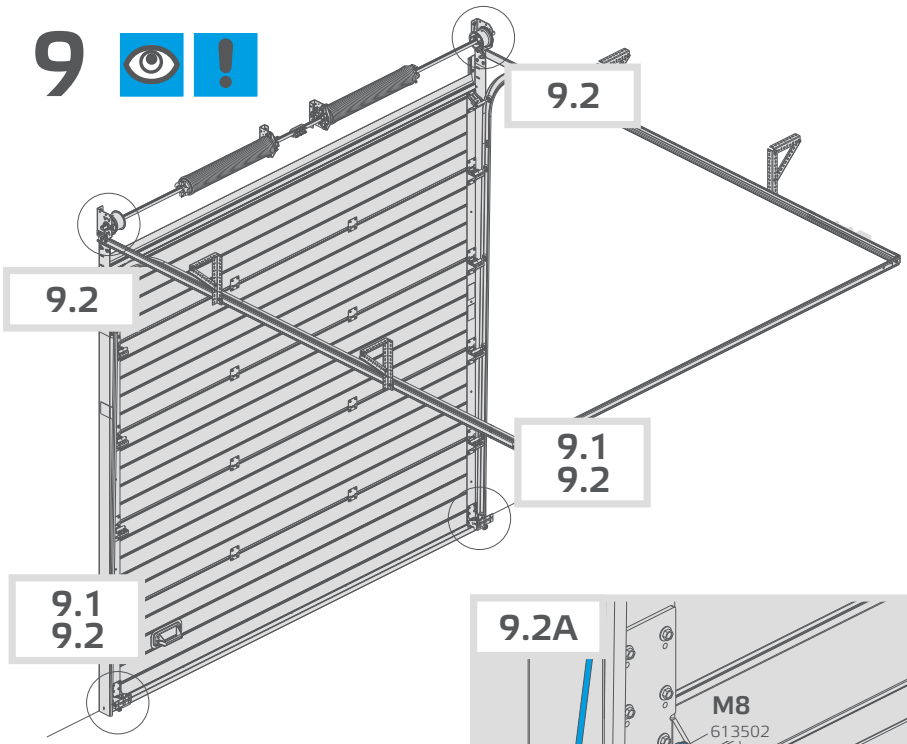
9.2
9.2
9.1
9.2
9.1
9.2

4

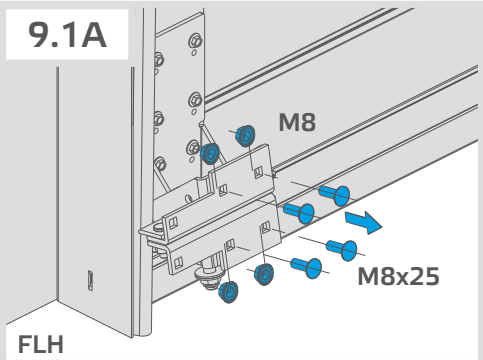
9.1A
M8
M8x25
FLH

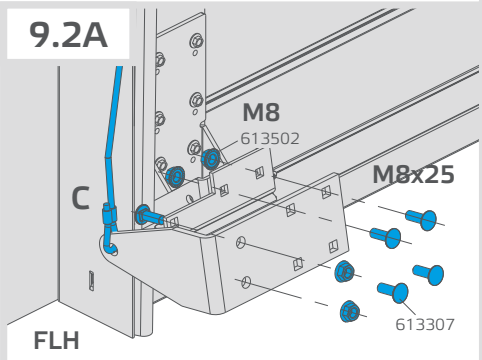
9.2A
M8
613502
M8x25
C
613307
FLH

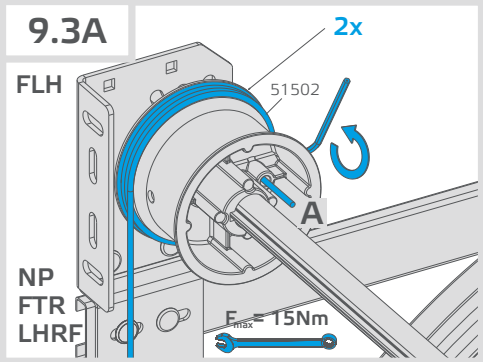
9.3A
2x
FLH
51502
A
NP
FTR
LHRF
Fmax = 15Nm

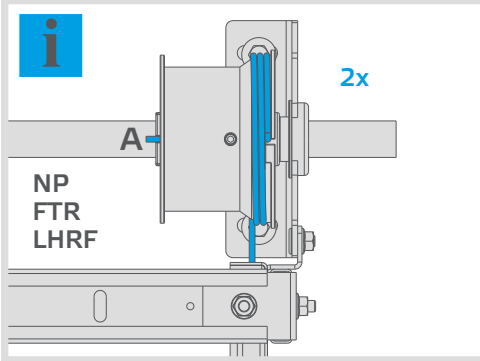
2x
A
NP
FTR
LHRF

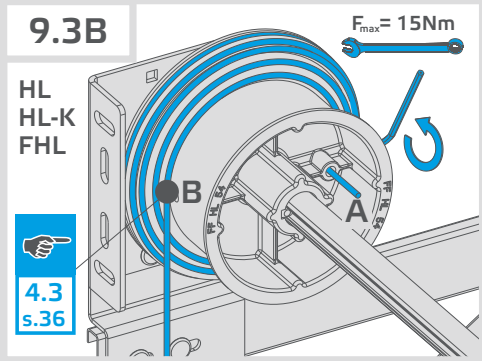
9.3B
Fmax = 15Nm
HL
HL-K
FHL
B
A
4.3
s.36

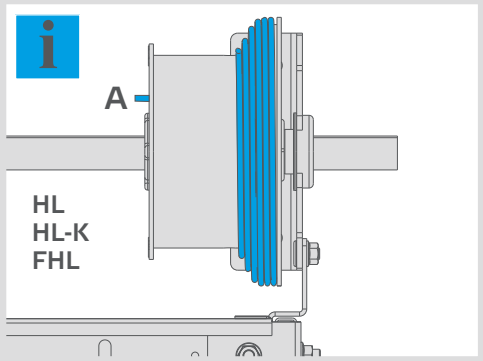
A
HL
HL-K
FHL

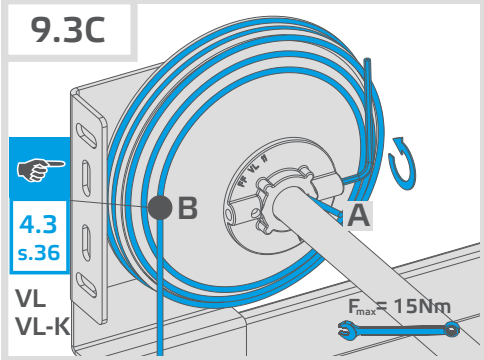
9.3C
4.3
s.36
B
A
VL
VL-K
Fmax = 15Nm

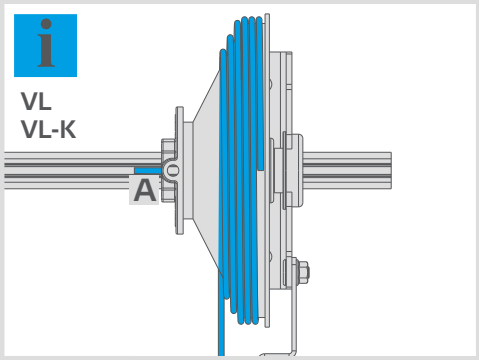
VL
VL-K
A

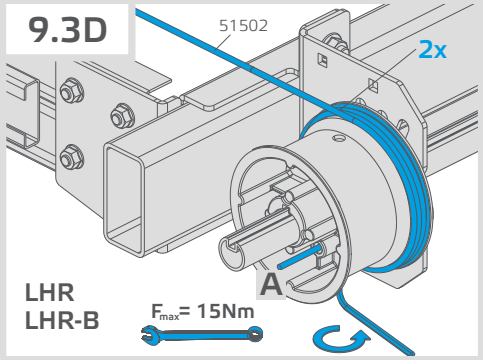
9.3D
51502
2x
A
LHR
LHR-B
Fmax = 15Nm

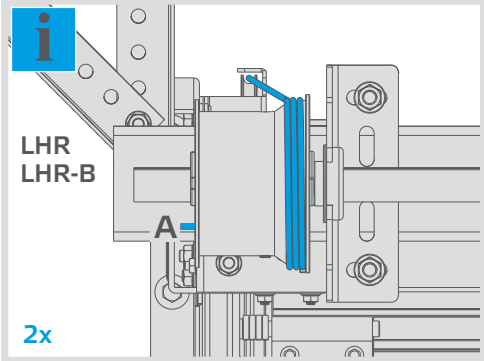
LHR
LHR-B
A
2x

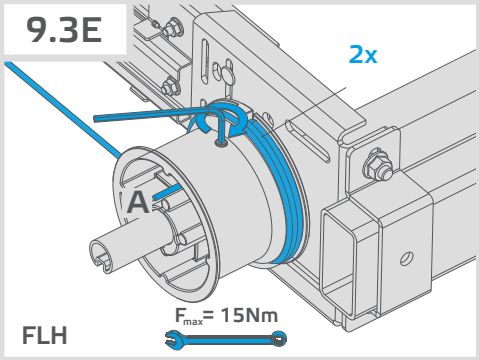
9.3E
2x
A
FLH
Fmax = 15Nm

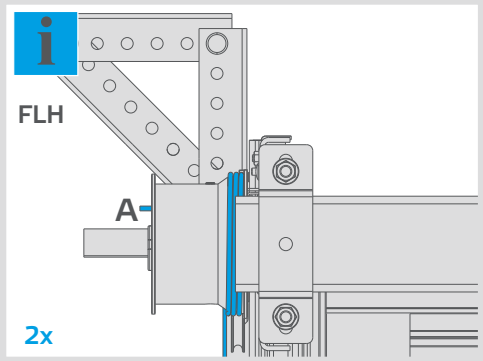
FLH
A
2x

# 9

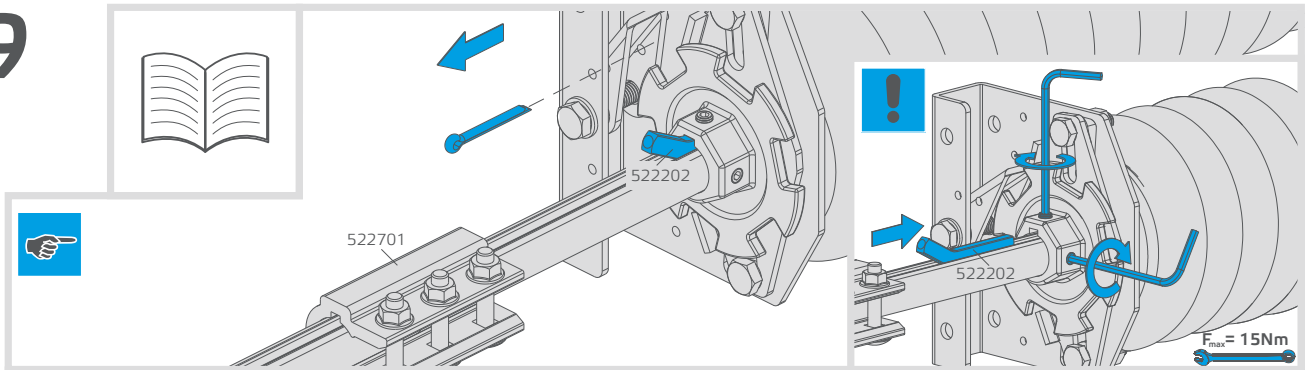


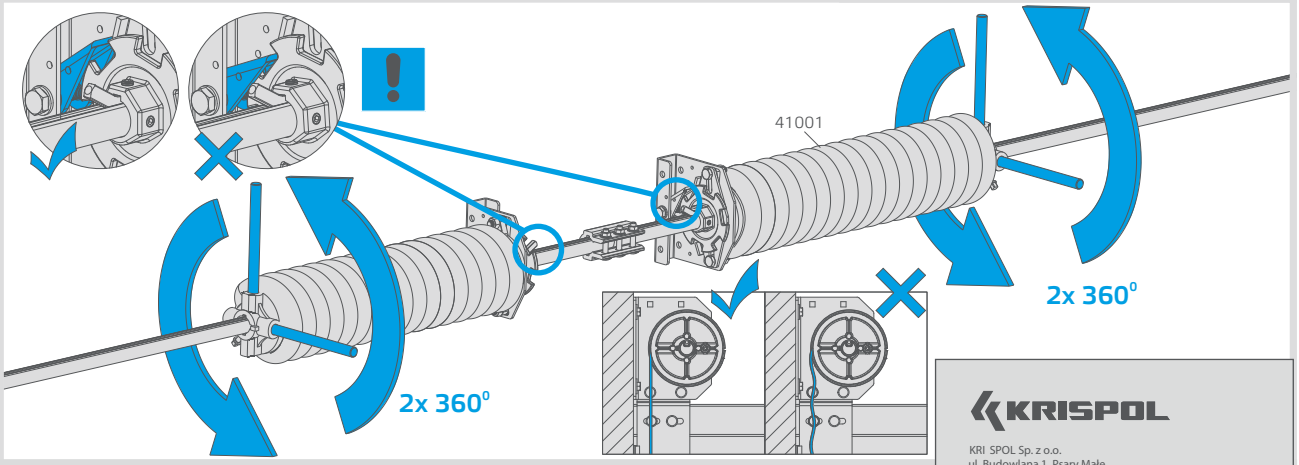


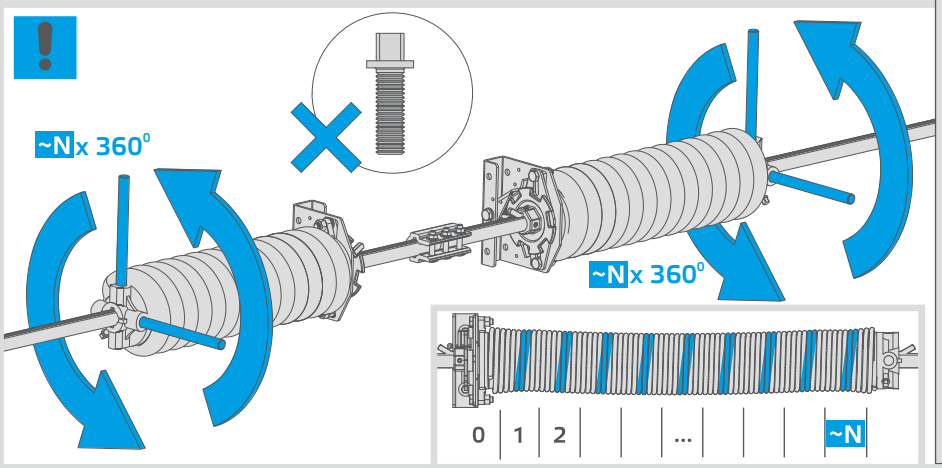


KRISPOL

KRI SPOL Sp. z o.o.
ul. Budowlana 1, Psary Małe
62-300 Września, Polska

| | |
|---|---|
| data produkcji<br>production date | XXXX-XX-XX |

K2 IS
Brama segmentowa przemysłowa-sekcje stalowe
Industrial sectional door: steel sections

| | |
|---|---|
| nr seryjny<br>serial number | XXXX |
| waga kurtyny<br>weight of armature | XXX.X kg |
| naciąg sprężyn<br>spring turns | ~N |
| odporność na obciążenie wiatrem<br>resistance to win load | klasa/class 1 |
| odporność na przenikanie wody<br>water tightness | klasa/class 1 |
| przepuszczalność powietrza<br>air permeability | klasa/class 1 |
| przenikalność cieplna<br>thermal resistance | U= 1,0 W/(m2/K) |

EN 13241-1

CE
(89/106/EWG)

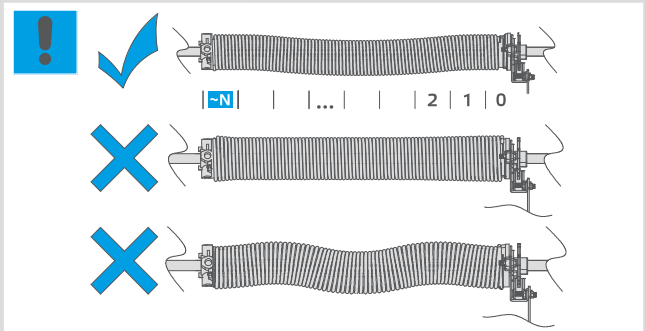


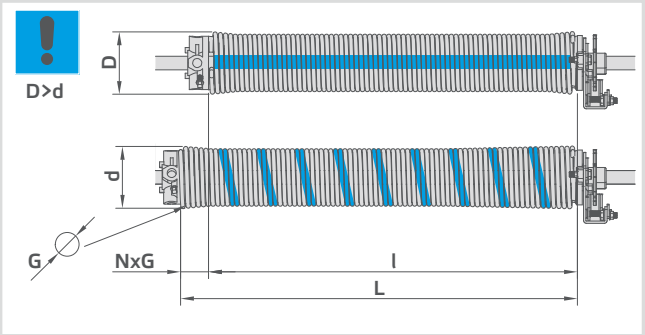


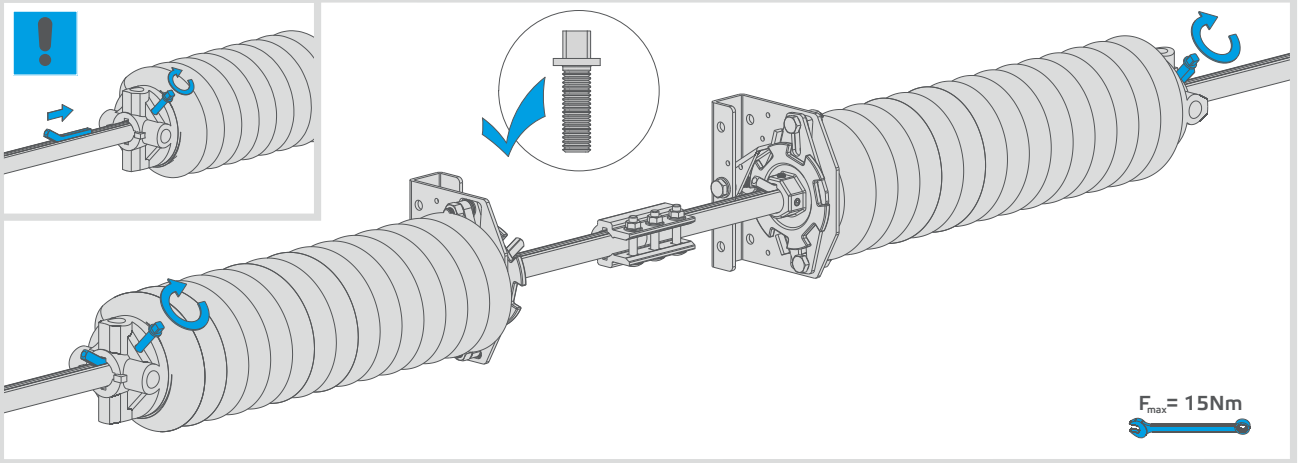

# 10

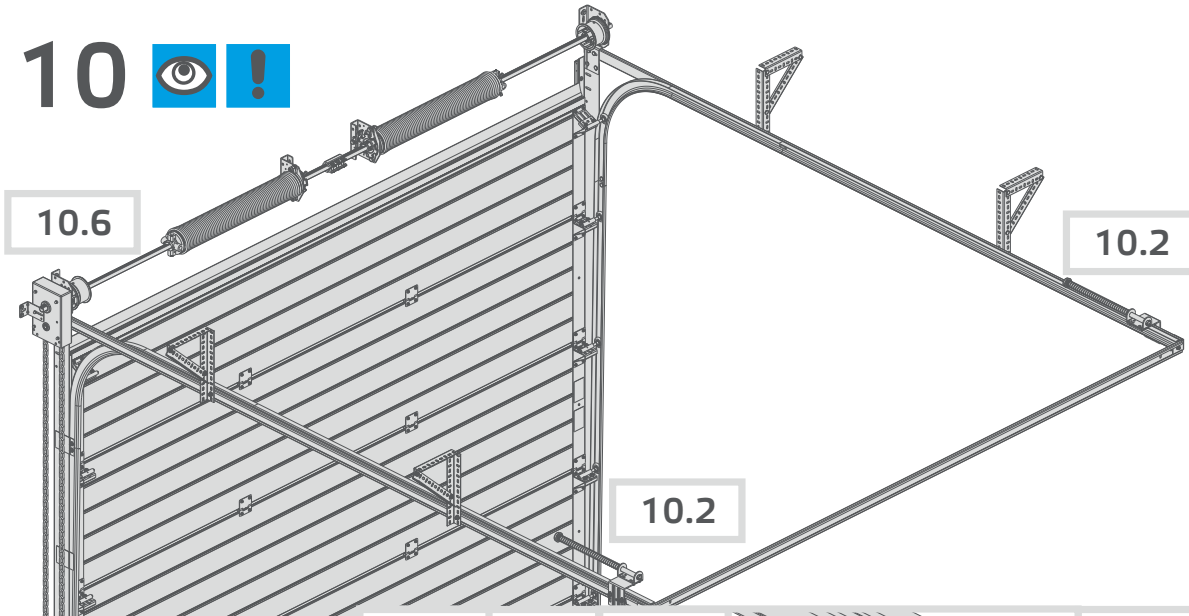
10.6
10.2
10.2
10.4
10.5

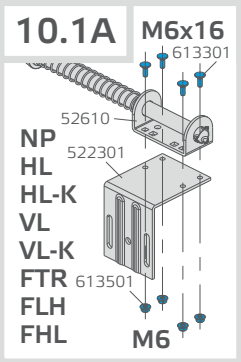
10.1A
M6x16
613301
52610
NP
HL
HL-K
VL
VL-K
FTR
FLH
FHL
522301
613501
M6

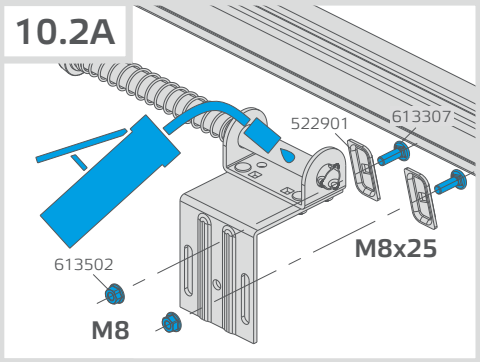
10.2A
522901
613307
M8x25
613502
M8

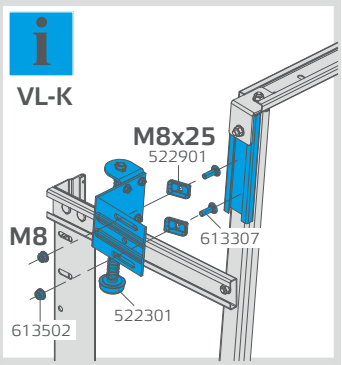
VL-K
M8x25
522901
M8
613307
522301
613502

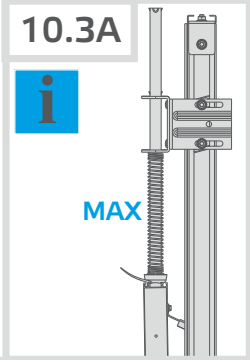
10.3A
MAX

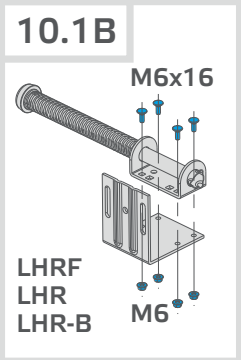
10.1B
M6x16
LHRF
LHR
LHR-B
M6

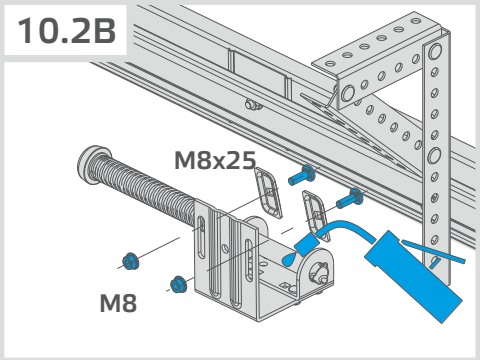
10.2B
M8x25
M8

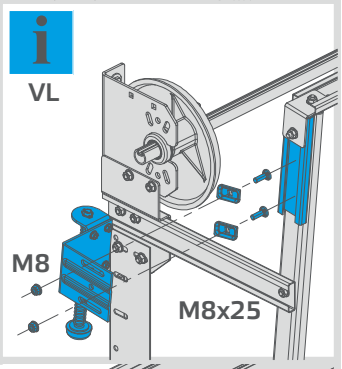
VL
M8
M8x25

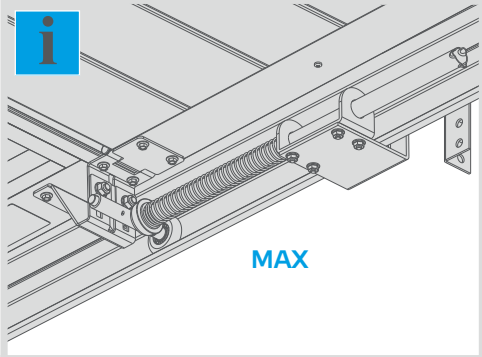
MAX

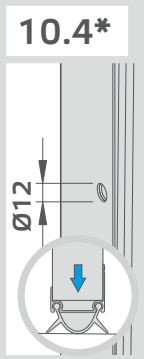
10.4*
Ø12

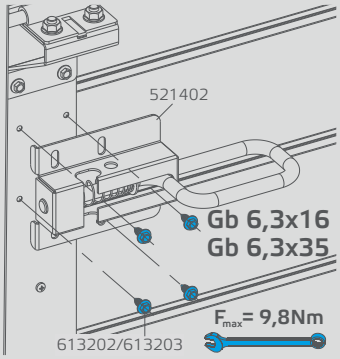
521402
Gb 6,3x16
Gb 6,3x35
613202/613203
Fmax= 9,8Nm

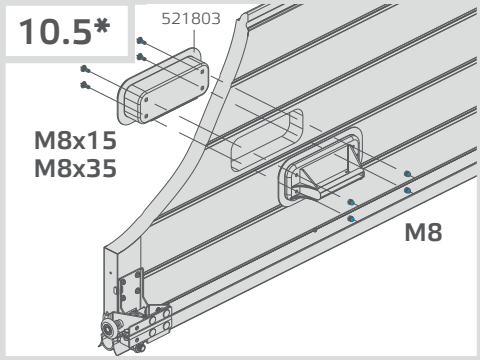
10.5*
521803
M8x15
M8x35
M8

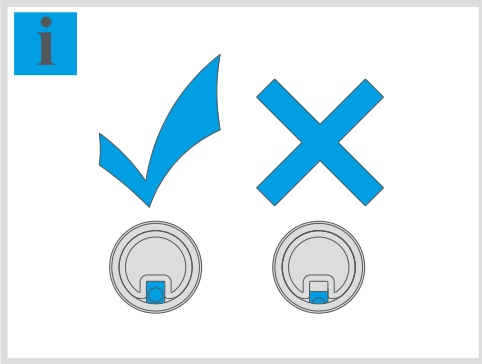

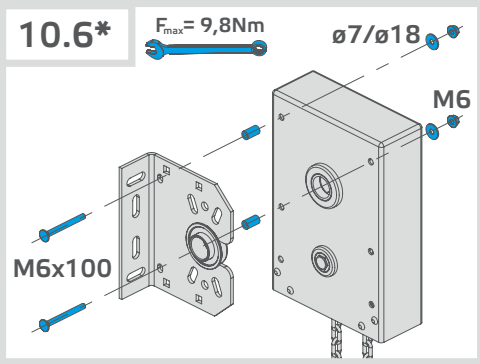
10.6*
Fmax= 9,8Nm
ø7/ø18
M6
M6x100

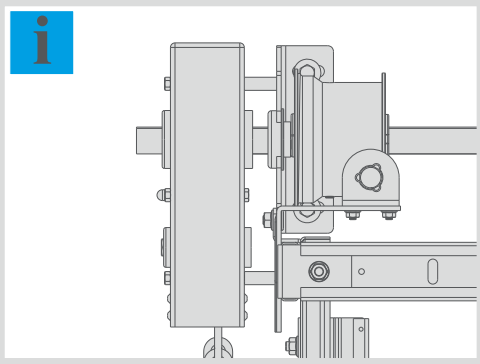

# 11*

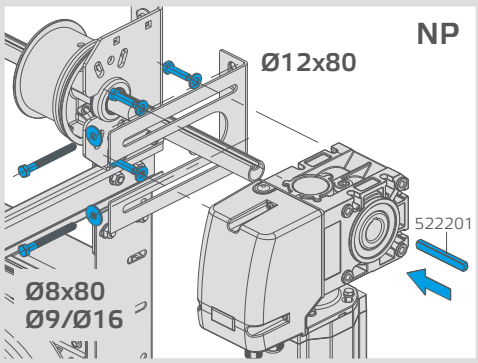
NP
Ø12x80
522201
Ø8x80
Ø9/Ø16

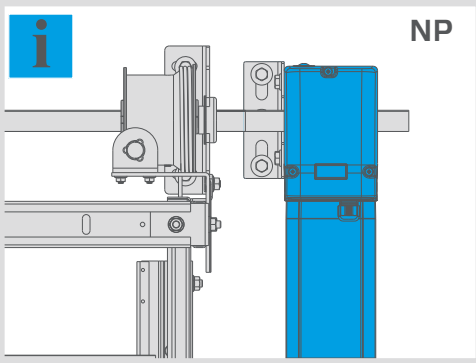
NP

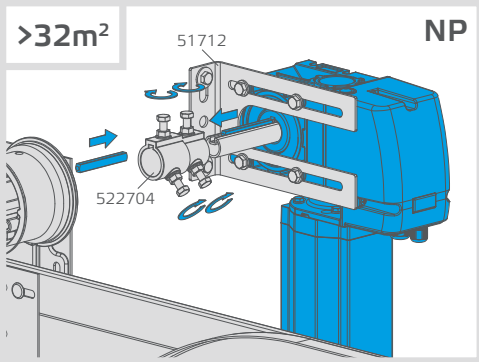
>32m²
NP
51712
522704

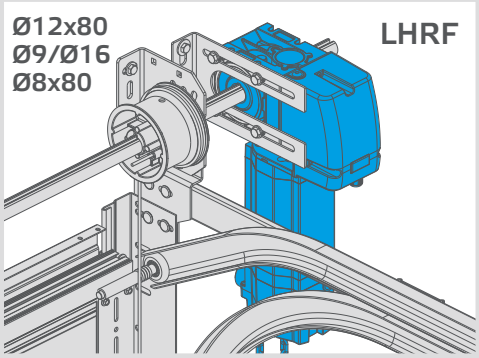
Ø12x80
Ø9/Ø16
Ø8x80
LHRF

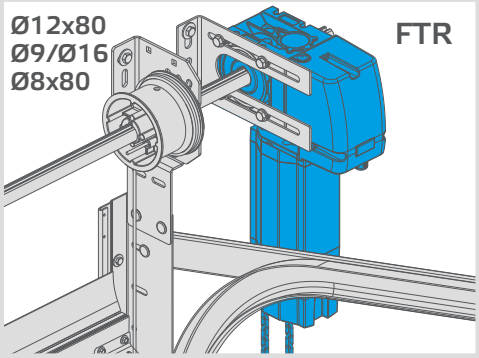
Ø12x80
Ø9/Ø16
Ø8x80
FTR

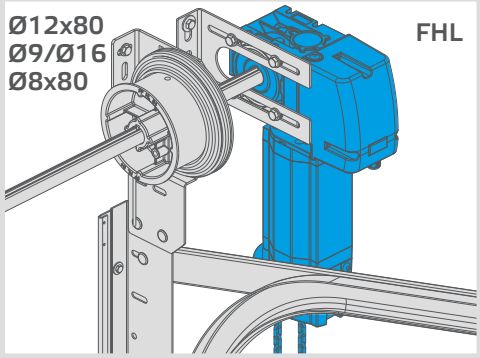
Ø12x80
Ø9/Ø16
Ø8x80
FHL

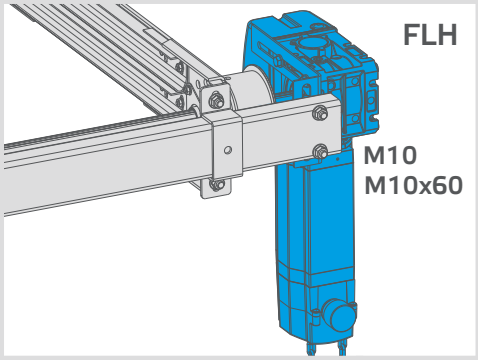
FLH
M10
M10x60

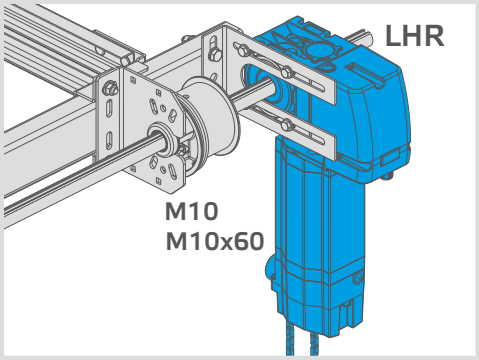
LHR
M10
M10x60

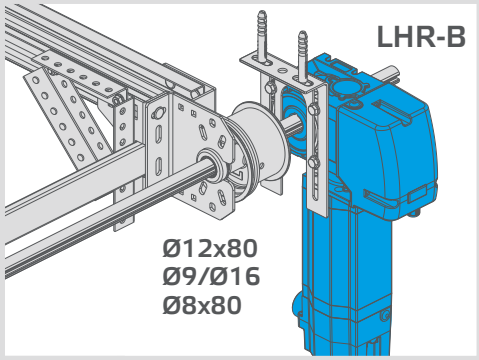
LHR-B
Ø12x80
Ø9/Ø16
Ø8x80

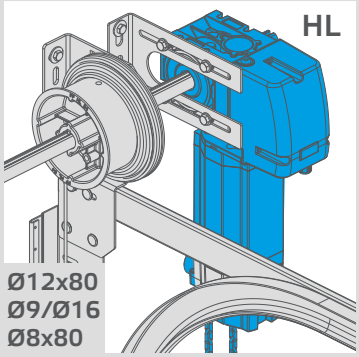
HL
Ø12x80
Ø9/Ø16
Ø8x80

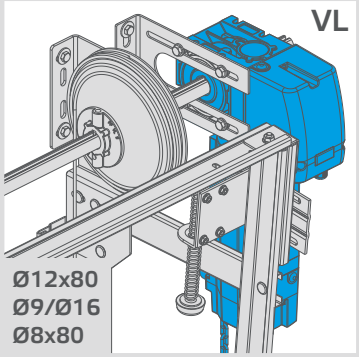
VL
Ø12x80
Ø9/Ø16
Ø8x80

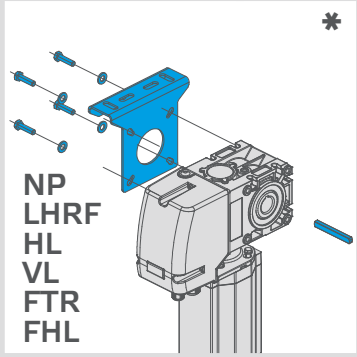
*
NP
LHRF
HL
VL
FTR
FHL

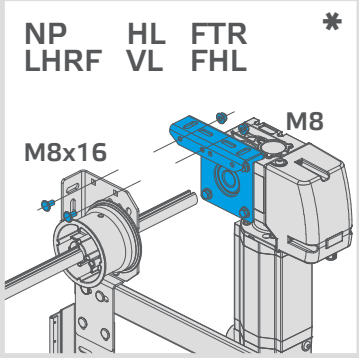
NP HL FTR
LHRF VL FHL
*
M8
M8x16

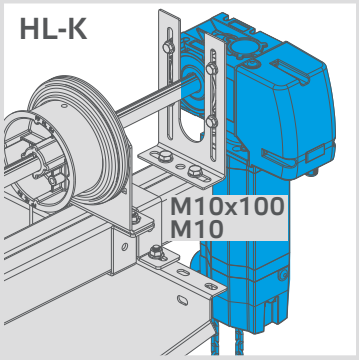
HL-K
M10x100
M10

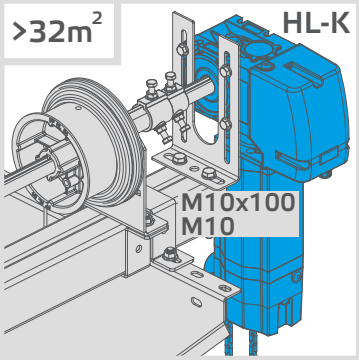
>32m²
HL-K
M10x100
M10

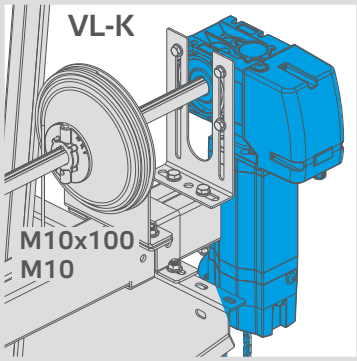
VL-K
M10x100
M10

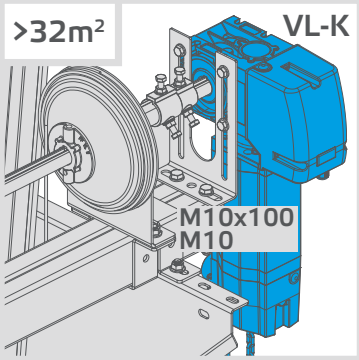
>32m²
VL-K
M10x100
M10

# 12*

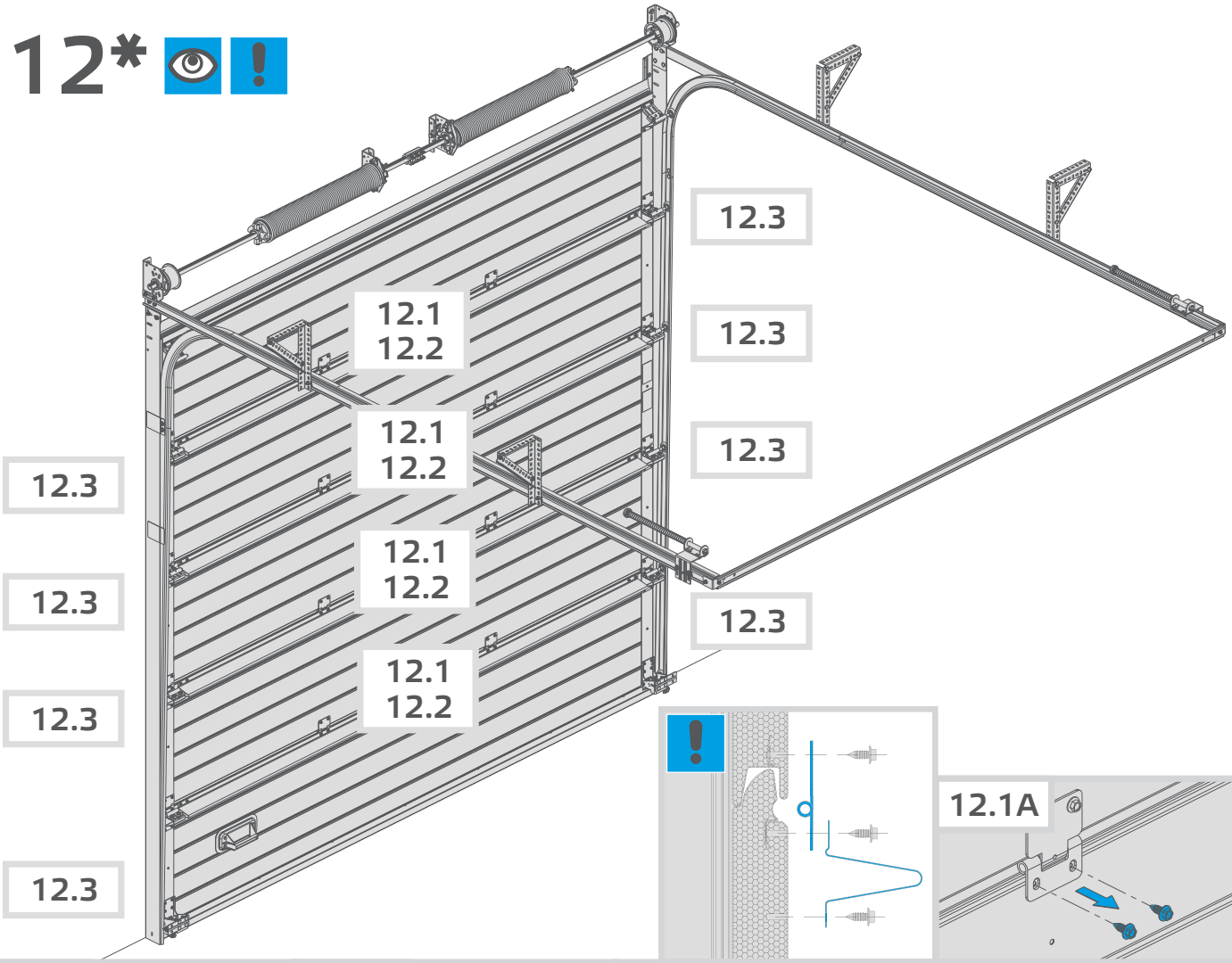
12.3
12.3
12.3
12.3
12.1
12.2
12.1
12.2
12.1
12.2
12.1
12.2
12.3
12.3
12.3
12.3




12.1A

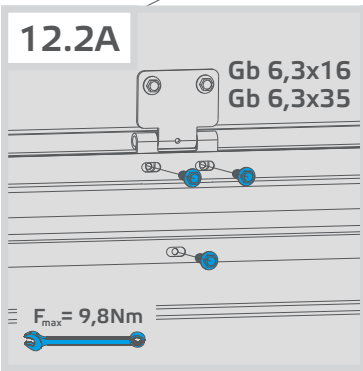
12.2A
Gb 6,3x16
Gb 6,3x35
$F_{max}$= 9,8Nm

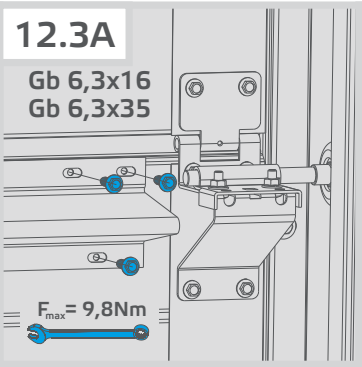
12.3A
Gb 6,3x16
Gb 6,3x35
$F_{max}$= 9,8Nm

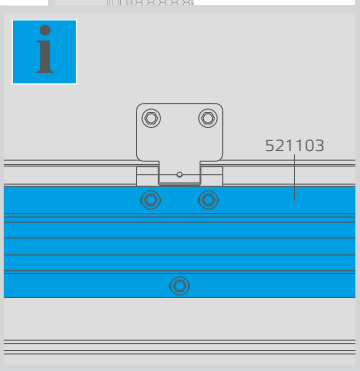
521103

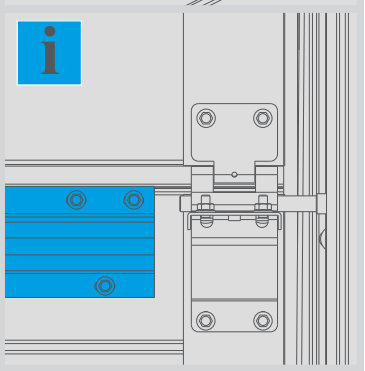

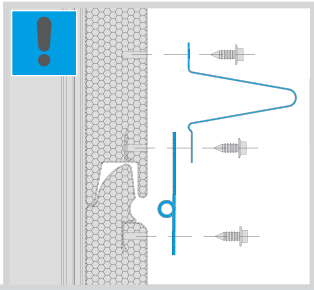

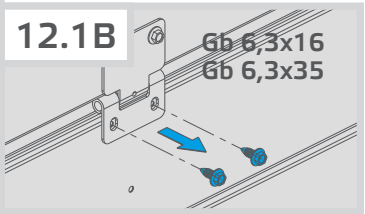
12.1B
Gb 6,3x16
Gb 6,3x35

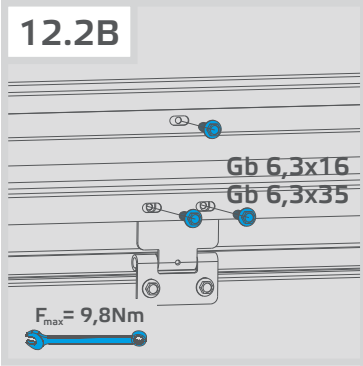
12.2B
Gb 6,3x16
Gb 6,3x35
$F_{max}$= 9,8Nm

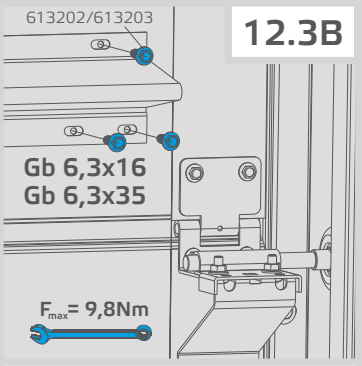
613202/613203
12.3B
Gb 6,3x16
Gb 6,3x35
$F_{max}$= 9,8Nm

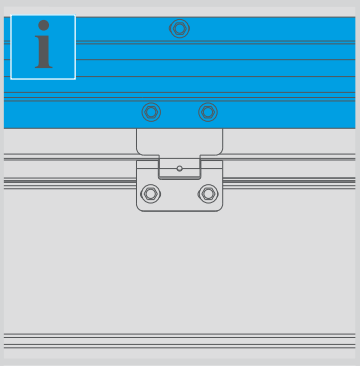

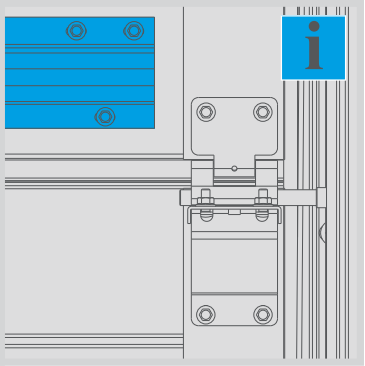

# 12*

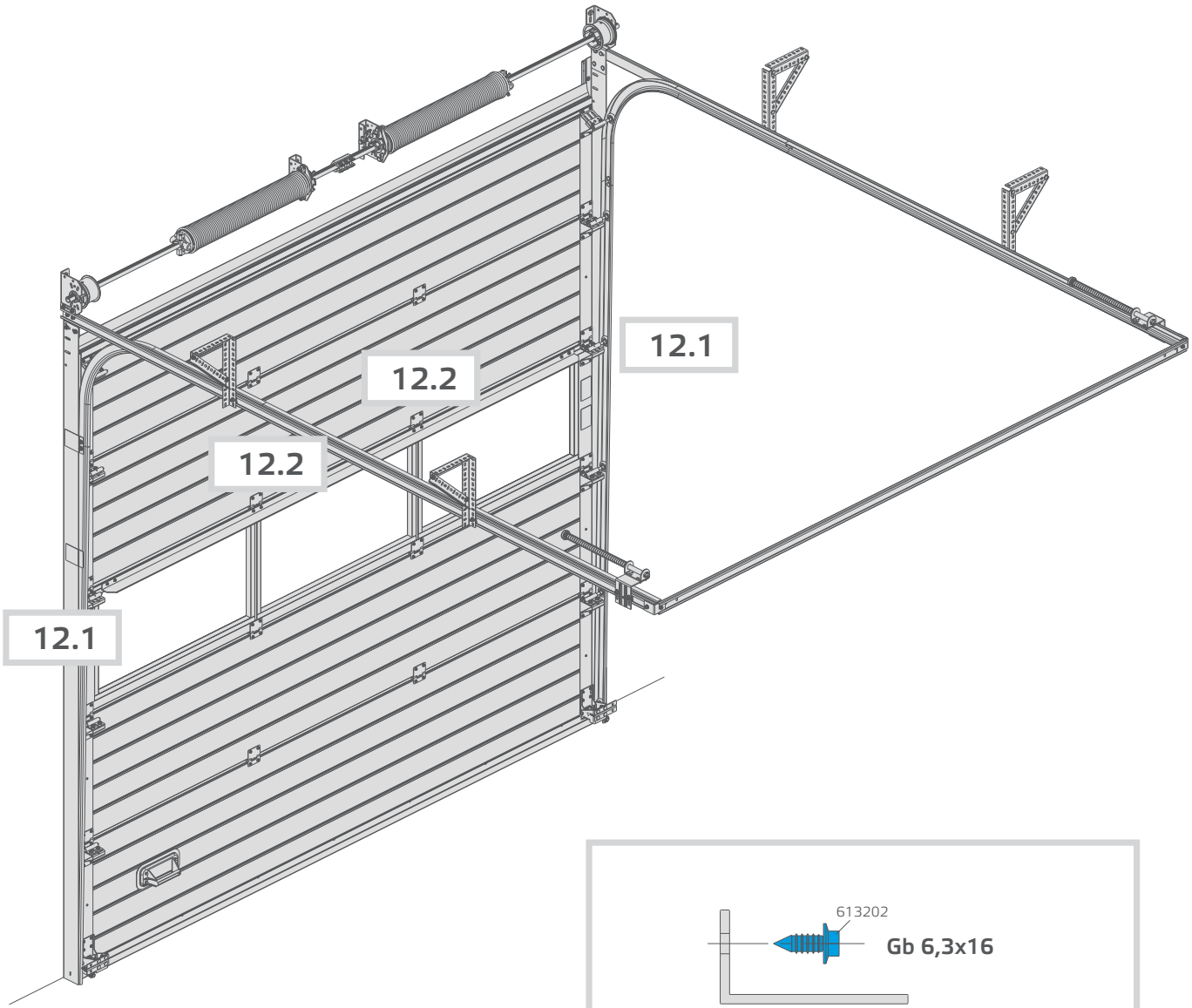
12.1
12.2
12.2
12.1

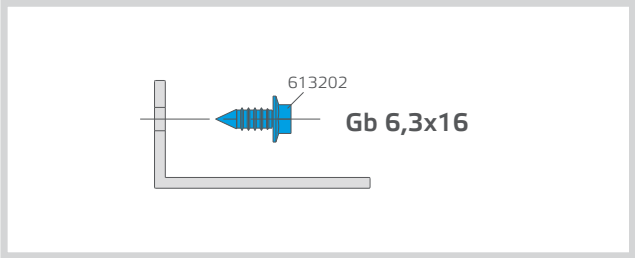
613202
Gb 6,3x16

7*

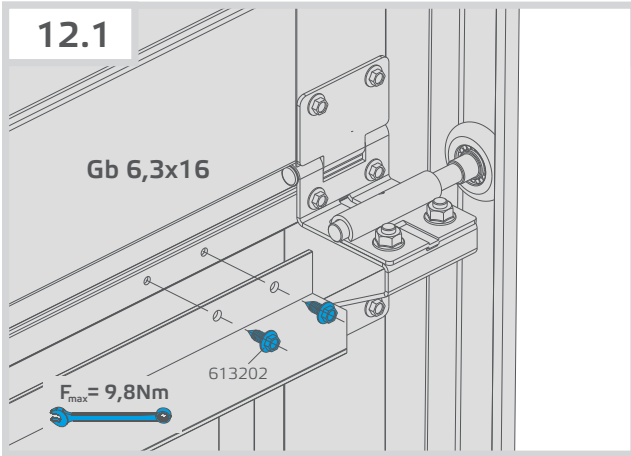
12.1
Gb 6,3x16
613202
$F_{max}$= 9,8Nm

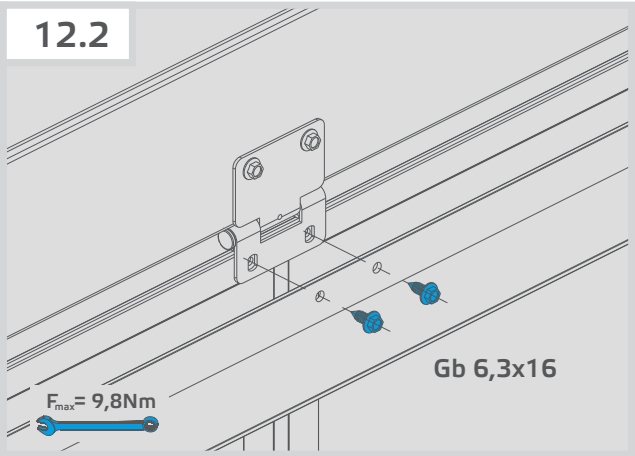
12.2
Gb 6,3x16
$F_{max}$= 9,8Nm